UA United Appliances
UADH24-DD3D1/O

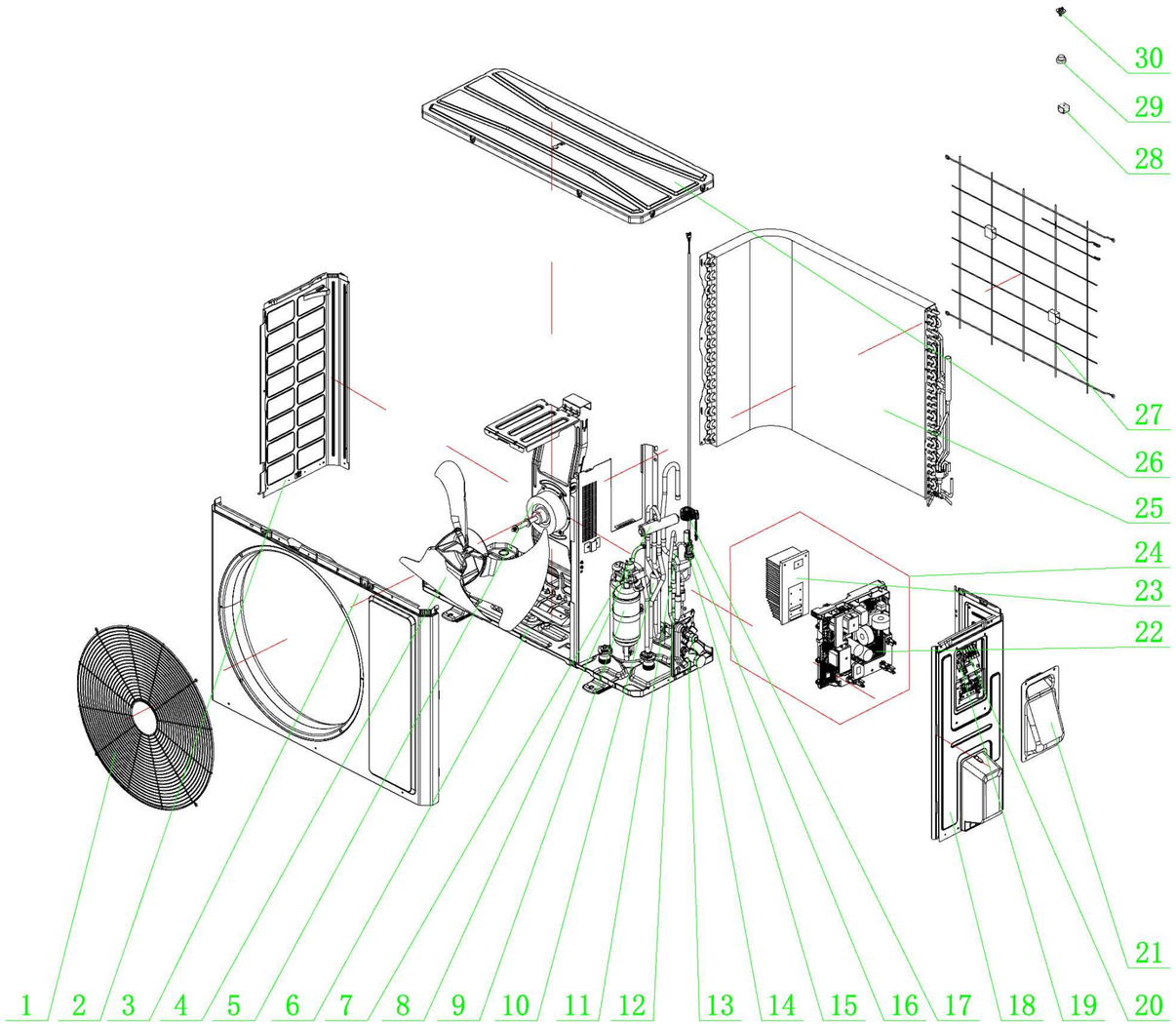

No.	Part Code	Part Name	QTY
1	01600406001701	Front Grill	1
2	012055060393P01	Left Side Plate	1
3	012073061611O1P01	Front Panel	1
4	10335262	Axial Flow Fan	1
5	1501506409	Brushless DC Motor	1
6	209058060567	Chassis	1
7	030152060860	4-Way Valve	1
8	N/A	Pressure Protect Switch	1
9	009001060621	Compressor and Fittings	1
10	N/A	Silencer	1
11	N/A	Strainer	1
12	071001060012	One Way Valve	1
13	N/A	Cut-off Valve 3/4(N)	1
14	N/A	Cut-off Valve 3/8(N)	1
15	N/A	Pressure Sensor	1
16	030174060230	Electronic Expansion Valve	1
17	07200206002311	Electric Expand Valve Fitting	1
18	01205606038704P01	Right Side Plate	1
19	42000100000102	Terminal Board	1
20	422000060106	Terminal Board	1
21	N/A	Handle	1
22	300027062325	Main Board	1
23	N/A	Radiator	1
24	100002074486	Electric Box Assy	1
25	011002061988	Condenser Assy	1
26	000097060516	Coping	1
27	01600106008501	Rear Grill	1
28	07201006000605	4 Way Valve Coil	1
29	N/A	Drainage Hole Cap	1
30	7651000425	Electrical Heater (Chassis)	1
31	200136000001	Cable Cross Loop	1
32	42020063	Sensor Insert	2
33	012048060145	Motor Support	1
34	3900030815	Temperature Sensor 20KT/15KS/50KT-XARP-06V(Ivory white)-1100/700/300mm	1
35	39000106007002	Temperature Sensor 20KT-EH-2P-K3(black)-850mm(North America)	1
36	34030065	Thermal resistor	1
37	4202021901	Jumper	1
38	000081060269	Right Side Plate Assy	1
39	000003060715	Front Panel Assy	1
40	012049060117P01	Top cover	1
41	200087060010	Valve Cover	1