UA United Appliances
UADH30-DD3D1/O

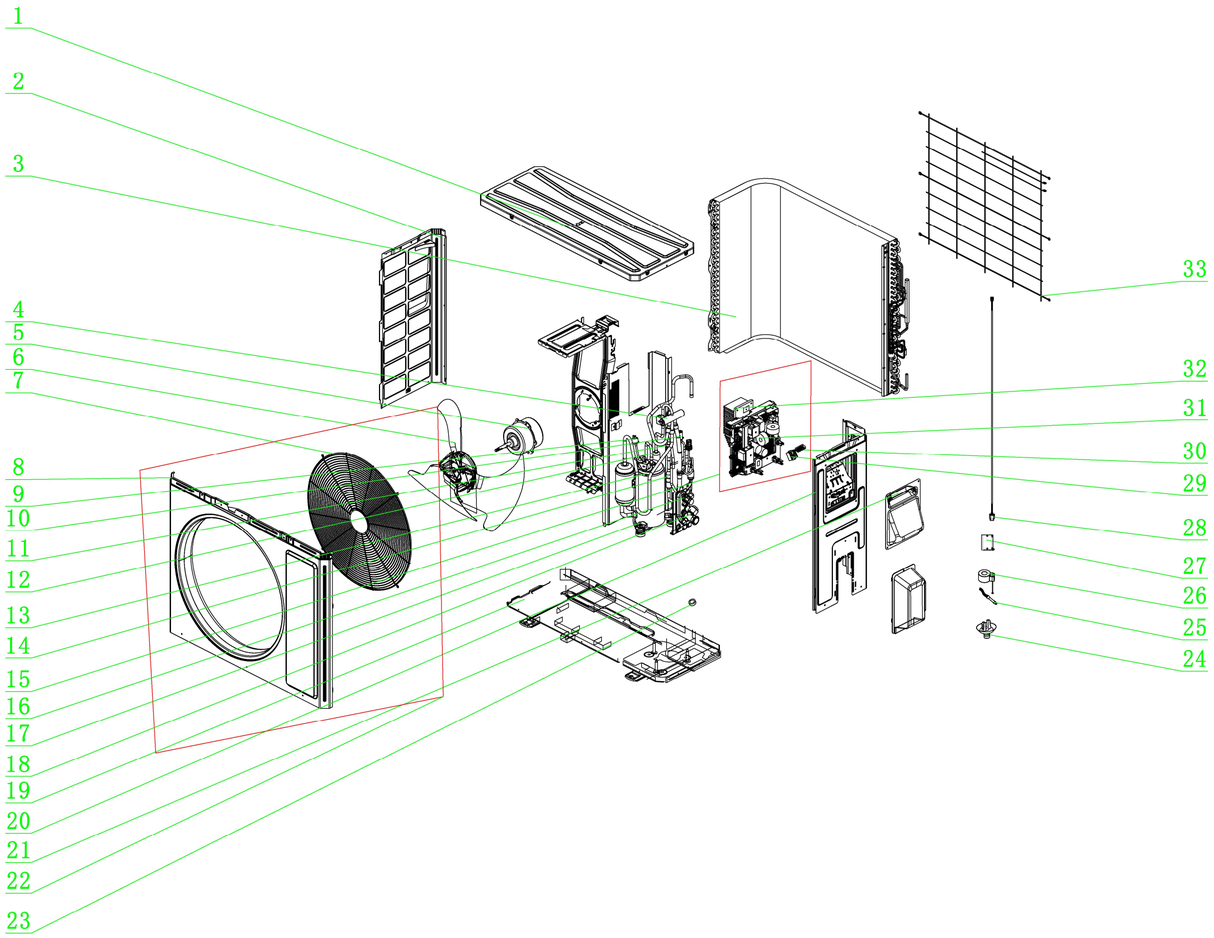

No.	Part Code	Part Name	QTY
1	000051060178	Top Cover Sub-Assy	1
2	012055060389P01	Left Side Plate	1
3	011002061989	Condenser Assy	1
4	030152060866	4-way Valve	1
5	15010400000110	Brushless DC Motor	1
6	103002060027	Axial Flow Fan	1
7	01600406001801	Front Grill	1
8	01202206001901P01	Cabinet	1
9	N/A	Pressure Protect Switch	1
10	N/A	Electronic Expansion Valve	1
11	035021060018	Strainer	2
12	N/A	Silencer 1	1
13	009001060755	Compressor and Fittings	1
14	071001060012	One Way Valve	1
15	100002076756	Electric Box Assy	1
16	N/A	Compressor Gasket	1
17	N/A	Cut-Off Valve 3/8(N)	1
18	01700006071103P01	Chassis Sub-Assy	1
19	N/A	Cut-Off Valve 3/4(N)	1
20	000081060285	Right Side Plate Assy	1
21	N/A	Handle	1
22	000003060713	Front Panel Assy	1
23	N/A	Drainage Hole Cap	1
24	N/A	Drainage Joint	1
25	3900030815	Sensor Sub-Assy	1
26	07200206002311	Electric Expand Valve Fitting	1
27	07201006000605	4 Way Valve Coil	1
28	N/A	Pressure Sensor	1
29	42000100000102	Terminal Board	1
30	422000060106	Terminal Board	1
31	300027063283	Main Board	1
32	N/A	Radiator	1
33	01600106008701	Rear Grill	1
34	209058060565	Chassis Assy	1
35	7651000425	Electrical Heater (Chassis)	1
36	200136000001	Cable Cross Loop	1
37	42020063	Sensor Insert	2
38	01204806019401	Motor Support	1
39	39000106007002	Temperature Sensor 20KT-EH-2P-K3(black)-850mm(North America)	1
40	34030065	Thermal resistor	1
41	4202021902	Jumper	1
42	01205606043702P01	Right Side Plate	1
43	01704106006103	Terminal Board Support sub-assy	1
44	012049060137P01	Top cover	1
45	20008706000801	Valve Cover	1