UA United Appliances

UADH36-DD3D1/O

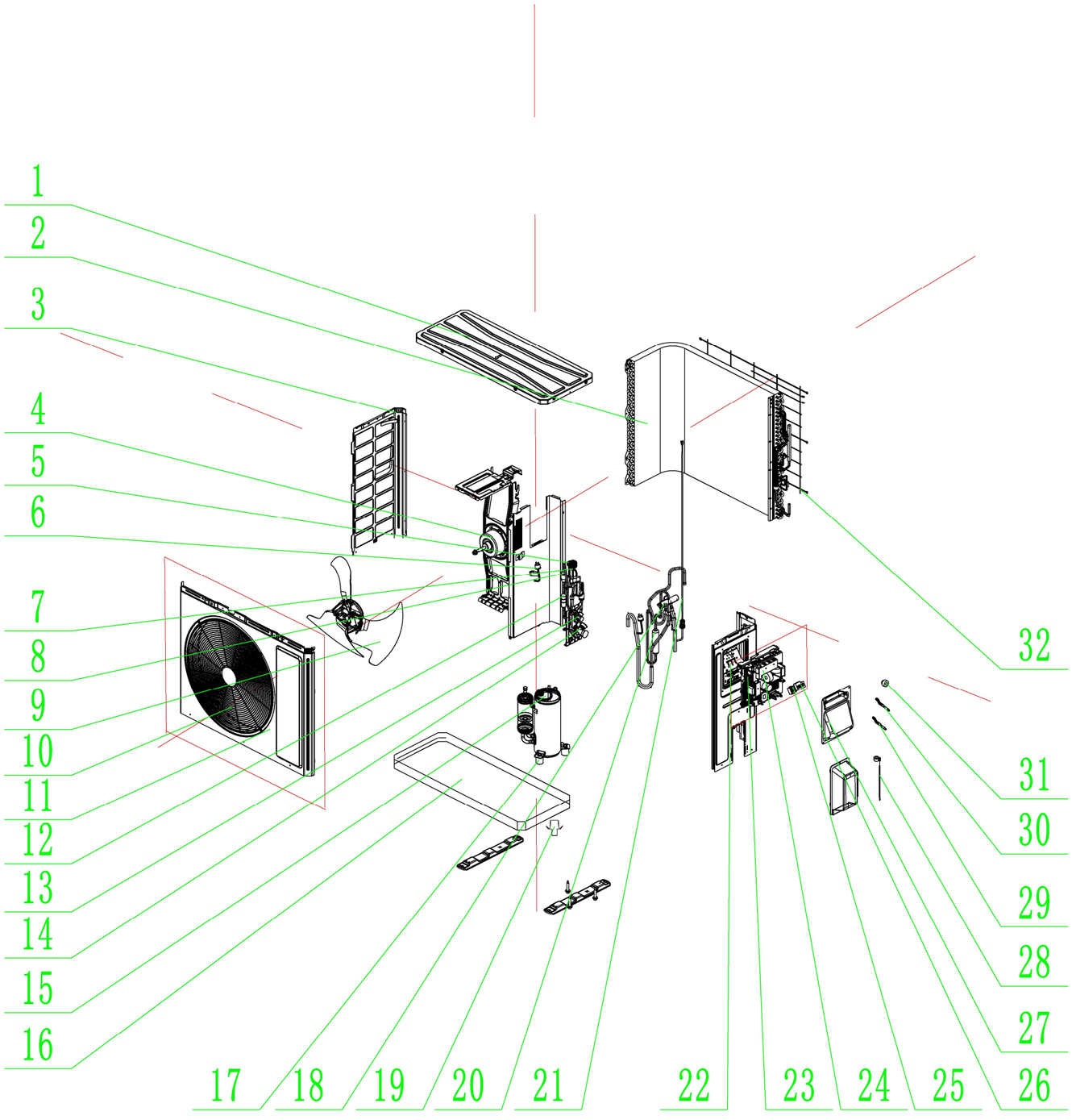

No.	Part Code	Part Name	QTY
1	012049060137P01	Top Cover	1
2	011002062004	Condenser Assy	1
3	012055060389P01	Left Side Plate	1
4	15010400000110	Brushless DC Motor	1
5	07200206002311	Electric Expand Valve Fitting	1
6	N/A	Pressure Protect Switch	1
7	43005017	Electronic Expansion Valve	1
8	035021060018	Strainer	2
9	103002060027	Axial Flow Fan	1
10	01600406001801	Front Grill	1
11	01202206001901P01	Cabinet	1
12	071001060012	One Way Valve	1
13	N/A	Cut-Off Valve 3/8(N)	1
14	N/A	Cut-Off Valve 3/4(N)	1
15	009001060690	Compressor and Fittings	1
16	01700006071117P01	Chassis Sub-Assy	1
17	009012000025	Compressor Gasket	3
18	030152060867	4-Way Valve	1
19	N/A	Drainage Joint	1
20	N/A	Silencer 1	1
21	N/A	Pressure Sensor	1
22	100002074485	Electric Box Assy	1
23	300027062324	Main Board	1
24	N/A	Radiator	1
25	42000100000102	Terminal Board	1
26	422000060106	Terminal Board	1
27	N/A	Handle	1
28	07201006000605	4 Way Valve Coil	1
29	3900030815	Temperature Sensor	1
30	39000106007002	Temperature Sensor	1
31	N/A	Drainage Hole Cap	1
32	01600106008701	Rear Grill	1
33	209058060564	Chassis Assy	1
34	7651000425	Electrical Heater (Chassis)	1
35	200136000001	Cable Cross Loop	1
36	42020063	Sensor Insert	2
37	01204806019401	Motor Support	1
38	34030065	Thermal resistor	1
39	4202021903	Jumper	1
40	000081060285	Right Side Plate Assy	1
41	01205606043702P01	Right Side Plate	1
42	01704106006103	Terminal Board Support sub-assy	1
43	000003060713	Front Panel Assy	1
44	000051060178	Top Cover Sub-Assy	1
45	20008706000801	Valve Cover	1